Socreat Electronics Technology Limited

WIND-FORCE TEST REPORT

Prepared For:	Socreat Electronics Technology Limited
Product Name:	Nighthawk Light
Model :	SC-NH165,SC-NH150,SC-NH120,SC-NH100,SC-NH80, SC-NH65,SC-NH50
Prepared By :	NEW TESTING CERTIFICATION CO., LTD NTC Building, South No.127, Baimang Village, Xili Town, Nanshan District, Shenzhen, China
Date of Report :	Apr.29,2016
Report No.:	NTC160561S

WIND-FORCE TEST REPORT

According to

IEC/ EN 60598-2-3

Part 2: Particular requirements

Section three – Luminaires for road and street lighting

Report Reference No…….....:	**NTC160561S**
Tested by (+ signature)……..:	Jerry Tan
Approved by (+signature)……....:	Dave Liu
Date of issue .....:	Apr.29,2016
Total number of pages……..…...:	8

Testing Laboratory.... ……..:	**New Testing Certification Co., Ltd.**
Address..……..:	NTC Building, South No.127, Baimang Village,Xili Town, Nanshan District, Shenzhen, China
Testing location/address ……:	Same as above
Applicant's name.....……..:	Socreat Electronics Technology Limited
Address..... ……..:	Building B,Jianyu 2nd Industrial Park, Gushu,Xixiang,Baoan District,Shenzhen,China.

Test specification:

Standard .....: ☒ IEC 60598-2-3:2011
☒ EN 60598-2-3: 2003+A1:2011

Test item description .....:	**Nighthawk Light**
Trade Mark :	Socreat 源创智能照明
Manufacturer.....:	Socreat Electronics Technology Limited
Model/Type reference.....:	SC-NH165,SC-NH150,SC-NH120,SC-NH100,SC-NH80, SC-NH65,SC-NH50
Ratings.....:	60W(max.)

Copy of marking plate

Nighthawk Light
Model: SC-NH165 60W

CE IP65

SOCREAT ELECTRONICS TECHNOLOGY LIMITED
Made in China

Remark: This label for reference only, final label on products should contain information on this label at least.other models have the similar labels, only models names and wattage are different

Results appearing herein relate only to the sample tested
The technical reports is issued errors and omissions exempt and is subject to withdrawal at

NEW TESTING CERTIFICATION Co., LTD
NTC Building, South No.127, Baimang Village, Xili Town, Nanshan District, Shenzhen, China

Possible test case verdicts:

- test case does not apply to the test object .....: N/A
- test object does meet the requirement.....: P(Pass)
- test object does not meet the requirement .....: F(Fail)

Testing .....:

Date of receipt of test item .....: Apr.23,2016

Date (s) of performance of tests.....: Apr.23,2016 to Apr.29,2016

General remarks:

The test results presented in this report relate only to the object tested.
This report shall not be reproduced, except in full, without the written approval of the issuing testing laboratory.
"(See Enclosure #)" refers to additional information appended to the report.
"(See appended table)" refers to a table appended to the report.
Note: EN Group Differences together with National Differences and Special National Conditions, if any, are in the Appendix to the main body of this TRF.
Throughout this report a comma (point) is used as the decimal separator.
Clause numbers between brackets refer to clauses in IEC 60598-1.

The test report only allows to be revised only within the report defined retention period unless standard or regulation was withdrawn or invalid.

When determining for test conclusion, measurement uncertainty of tests has been considered.

General product information:

1. The product had same electrical construction, differences the size and total wattage.
2. The model SC-NH165 was selected for main testing.

IEC/EN 60598-2-3			
Clause	**Requirement + Test**	**Result - Remark**	**Verdict**
3.6.3 (3.6.3)	The means for attaching the luminaire or external part to its support shall beappropriate to the weight of the luminaire or external part. The connection shall be designedto withstand wind speeds of 150 km/h on the projected surface of the assembly without undue deflection.	No undue deflection.	P
	Fixings which carry the weight of the luminaire or external part and internal accessories shallbe provided with means to prevent the dislodgement of any part of the luminaire or externalpart by vibration, either in service or during maintenance.		P
	Parts of luminaires or external parts which are fixed other than with at least two devices, for example, screws or equivalent means of sufficient strength, shall have such extra protectionas to prevent those parts falling and endangering persons, animals and surroundings, shoulda fixing device fail under normal conditions.		P
	Compliance is checked by inspection and, for mast-arm or post-top mounted luminaires orexternal parts, by the test of 3.6.3.1.	Post-top mounted luminaires	P
	The wind-force test is not required to be performed on tunnel luminaires.		N/A
3.6.3.1 (3.6.3.1)	Static load test for mast-arm or post-top mounted luminaires or external parts		---
	The luminaire or external part is mounted in such a way that the most critical surface isloaded.		P
	The most critical surface is determined by calculating the highest value of Cd xS where Cd is the drag coefficient;S is the area of the surface to be loaded (m2).	Cd=1.2, S=0.99495	P
	The drag coefficient depends on the shape of the surface. For luminaires or external parts forwhich the Cd is not measured, the value of 1,2 shall be taken.		P
	The means of attachment shall be secured in accordance with the manufacturer's instructions.		P
	A constant evenly distributed load is applied for 10 min on the most critical surface.	10 min	P
	methods of equal distribution of the load. In cases where bags are used, these can befilled with sand, lead shot or small balls.	See Figure 1	P
	The load shall be equal to F = 1/2 Rh x S xCd x V2 (N)		P

IEC/EN 60598-2-3			
Clause	**Requirement + Test**	**Result - Remark**	**Verdict**
3.6.3.1(3.6.3.1)	Rh is equal to 1,225 kg/m3 (air volumic mass); V is the wind speed (m/s).The wind speeds relevant to the mounting heights of luminaires or external parts shall be V = 45 m/s (163 km/h) for heights up to 8 m; V = 52m/s (188 km/h) for heights between 8 m and 15 m; V = 57 m/s (205 km/h) for heights of more than 15 m.	Mounting heights is more than 15 m; V = 57 m/s (205 km/h)	P
	After the test, there shall be no visible failure impairing the safety, no permanent deformationfrom the attachment which exceeds a slope of more than 2 cm/m, and no rotation around thepoint of attachment.	No deformation	P

IEC/EN 60598-2-3			
Clause	**Requirement + Test**	**Result - Remark**	**Verdict**

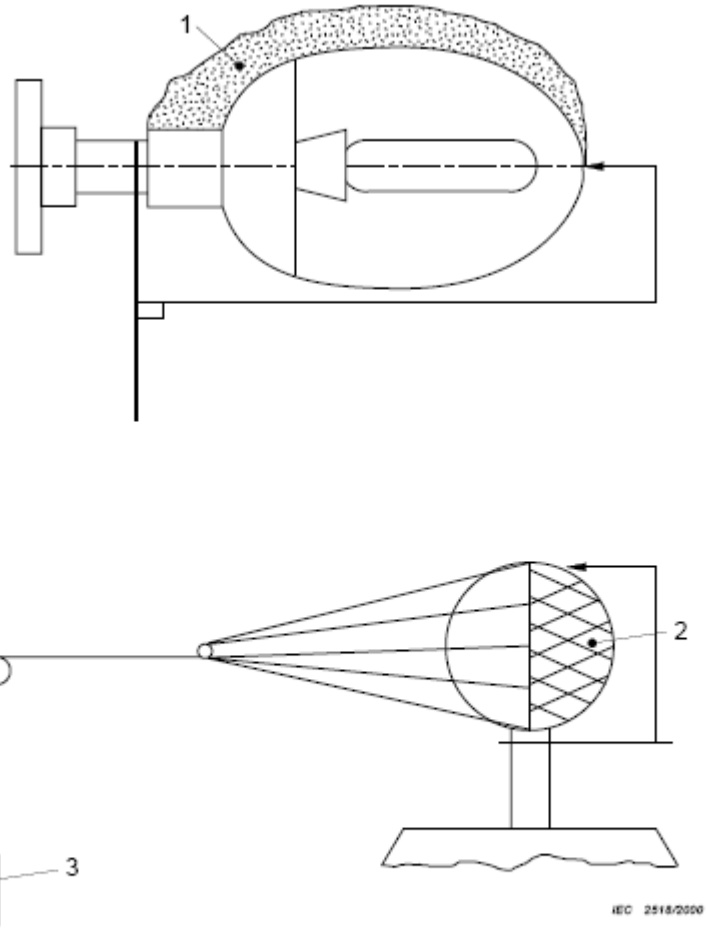

Key

1 Sandbag
2 Net
3 Weight

Figure 1 – Different procedures for the static wind-force test

Photo document:

(Photos of EUT)

Photo1: Front view of the EUT (Representative Construction)

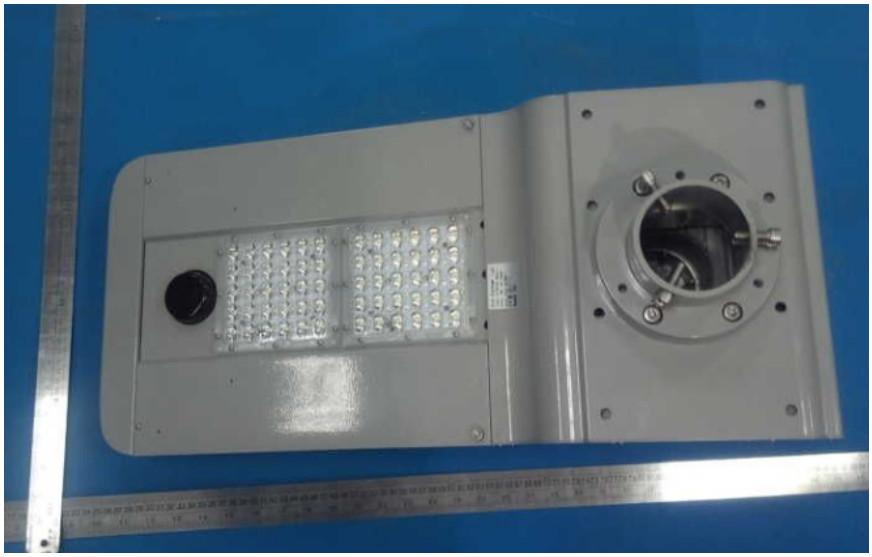

Photo 2: Back view of the EUT (Representative Construction)

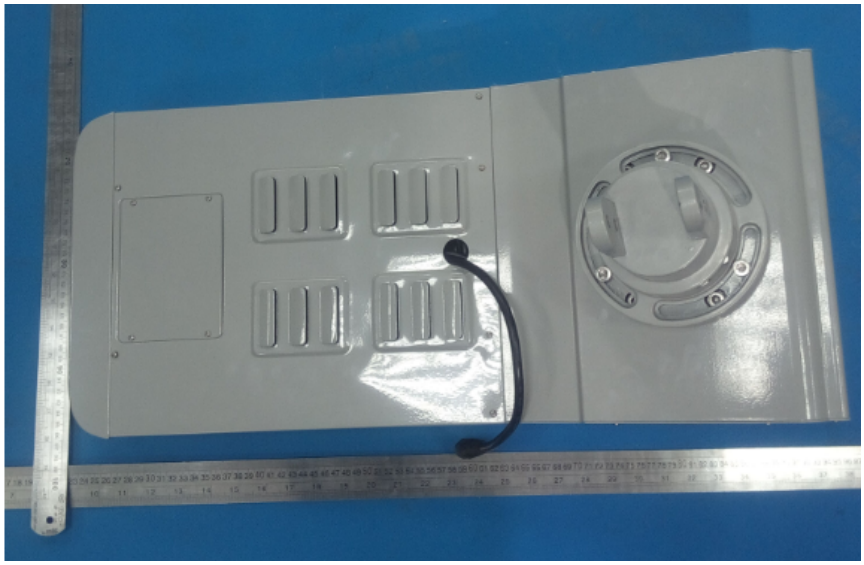

Photo 3: View of the Solar module of EUT (Representative Construction)

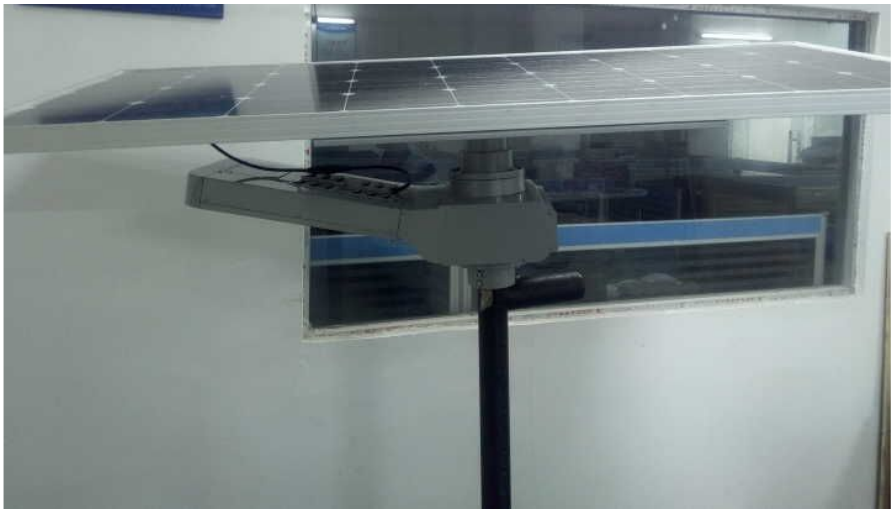

Photo 4: View of the Solar module of EUT (Representative Construction)

--- End Report ---